INTELLECTUAL PROPERTY OFFICE OF SINGAPORE
PATENT AGENTS QUALIFYING EXAMINATION 2017

PAPER A: PREPARATION OF A PATENT SPECIFICATION
24 October 2017, Tuesday
1330 – 1730 hrs

Maximum Time: 4 Hours (includes reading time) Maximum Marks: 100

INTELLECTUAL PROPERTY OFFICE OF SINGAPORE

INSTRUCTIONS TO CANDIDATES

1. This Paper consists of 17 pages, including this cover page and 4 blank pages.

2. Type/Write your answers in English. Answers in any other language will not be marked. For candidates who opted out from laptop examination: Answers in illegible handwriting will not be taken into consideration.

3. One hardcopy of the question paper is provided, for your reading and for your use (optional) when answering the question(s) in the Answer Script/Answer Booklet(s). For candidates who opted out from laptop examination: You are given two hardcopies of the question paper.

4. Only your answers and/or drawings to the question(s) typed/written or indicated/glued in the Answer Script/Answer Booklet(s) provided by the Examination Secretariat will be considered. Candidates should not change the format of the Answer Script or type in the margin. For candidates who opted out from laptop examination: You are to write on one side of each sheet in the Answer Booklet(s).

5. Information provided in the question(s) may be obtained from actual situations or modified therefrom for the purpose of this examination. You should accept the facts given in the paper. Assume also that the prior art given is exhaustive.

6. The documents provided in this question are:

    a. Details of Meeting and Client's Write-Up (1 page);
    b. Document A: New Invention (7 pages including drawings);
    c. Document B: Prior Art #1 (1 pages including drawings); and
    d. Document C: Prior Art #2 (3 pages including drawings);

End

PAPER A: PREPARATION OF A PATENT SPECIFICATION
24 October 2017, Tuesday
1330 – 1730 hrs

Maximum Time: 4 Hours (includes reading time) Maximum Marks: 100

THIS IS A BLANK PAGE

PAPER A: PREPARATION OF A PATENT SPECIFICATION
24 October 2017, Tuesday
1330 – 1730 hrs

Maximum Time: 4 Hours (includes reading time) Maximum Marks: 100

Details of Meeting and Client Write-Up (1/1)

Your client, Halyna, meets with you to discuss her new invention.

During a recent trip to Kuala Lumpur, Halyna was on the KLIA Express with her suit case, which is shown in Figure 1.

Halyna has always liked the retractable handle 20 but has never understood why the wheels 15 are not retractable. When she was on the KLIA Express she placed her bag beside the seat, only to find the bag rolling down the aisle as the train accelerated. The luggage racks were all full and so she was forced to hold the bag for the entire journey. On her return to Singapore she checked her bag in, and so it was placed in the hold of the aircraft. On retrieving it from the carousel, one of the wheels had completely sheared off and a second damaged beyond repair. Whilst the airline refunded the cost of the damaged bag, this was nevertheless extremely frustrating for Halyna, which got her thinking about her new invention.

Please draft a patent specification and claims for Halyna's invention in light of the prior art of Figure 1 and Figures 5A to 5C. Halyna specifically mentions that she is only interested in the value added business of making a better type of suit case. To this end, not only is the structure of the wheel release invention important, the process is also important and she would like both an apparatus and method claim. Halyna believes the invention is nevertheless relatively simple and, given her budget, Halyna would like no more than 8 claims in total, covering both the apparatus and method.

THIS IS A BLANK PAGE

PAPER A: PREPARATION OF A PATENT SPECIFICATION
24 October 2017, Tuesday
1330 – 1730 hrs

Maximum Time: 4 Hours (includes reading time) Maximum Marks: 100

Document A: New Invention (1/7)

Description of Embodiments of New Invention

Figure 2 is an isometric view of her new invention, having a handle 20 that retracts into the bag 10 as before. However, Halyna explains her new invention having wheels 25 which are selectively retractable into the bag preventing damage to the wheels as well as preventing the bag from unwanted rolling.

Halyna recognized that merely retracting the wheels was not enough. Retracting the wheels should be as simple as it is for the handle and so Halyna has invented a wheel release frame arrangement shown in Figures 3A to 3C. As can be seen in Figure 3A, a wheel release frame 35 is cooperatively coupled at one end to the handle 20, with the wheel release frame 35 terminating with four engagement portions 40 at opposed ends of the frame 35. The connection of the wheel release frame 35 and the handle 20 is such that they move as a single member. Each of the engagement portions 40 correspond to the location of the wheel 25. The wheel release frame 35 is mounted to the inside of the suitcase by brackets 45 which allow for accurate and unrestrained sliding and so preventing buckling of the wheel release frame. The wheel release frame will ideally be made of a hollow steel or aluminium member with the brackets 45 being a low friction polymer such as polyethylene. For very large luggage where the wheel release frame 35 may be relatively long, the brackets 45 may include slide bearings to completely eliminate frictional resistance. This may also be considered a premium version and so attract a premium price.
Each wheel 25 is part of a wheel assembly unit 30 and according to Halyna's invention it is the wheel assembly unit 30 that is movable between an extended position as shown in Figure 3A and a retracted position as shown in Figure 3C.

Starting with Figure 3A, the process commences in the extended form with the handle 20 and wheel assembly units 30 in the extended position. As shown in Figure 3B, a force 22 is applied to the handle to move the handle 20 into a retracted position which in turn moves 50 the engagement portions 40. The engagement portions 40 are initially engaged with the wheel assembly units 30 fixing them in the extended position. As the handle moves to the retracted

Document A: New Invention (2/7)

position, the engagement portions become disengaged from the wheel assembly units 30. This disengagement releases the wheel assembly units 30 so that they may be subsequently retracted. As shown in Figure 3C, to retract the wheel assemblies 30, a force 60 is applied to the body of the case, which forces the wheel assemblies 30 into the case where they are locked in place through reengagement with the engagement portions 40 of the wheel release frame 35.

Figures 4A to 4C show a particular embodiment of how the engagement portions 40 engage and release the wheel assembly units 30. The wheel assembly unit 30 comprises the wheels 25, a wheel mounting 32 to which the wheels 25 are rotationally mounted, a housing 70 and a compression spring 75 which applies a force to the wheel mounting 32 such that the wheel mounting and wheels project from the case 10 when in an unstressed condition. The wheel assembly 30 further includes a housing 70 against which the spring 75 reacts. It should be noted that the housing 70 has been omitted from Figures 3A to 3C for clarity. Within the wheel mounting 32 is a spring loaded projection 65.

The engagement portion 40 includes two recesses 80 and 85. Both recesses act to receive the projection 65. The first recess 80 corresponds to the extended position of the handle and the wheels 25. The second recess 85 corresponds to the retracted position of the handle and wheels.

In terms of the process, the specific embodiment of Figure 4A corresponds to the more general embodiment of Figure 3A. Similarly, Figures 4B and 3B correspond, as do Figures 4C and 3C.

Accordingly, in Figures 3A and 4A the handle is extended lifting the engagement portion 40 such that the projection 65 engages with the first recess 80. In this position the projection 65 is sufficient to bear the load of the suit case 5. With a typical maximum bag weight of 30kg, the holding capacity of each of the four projections will therefore be 7.5kg plus a safety factor. On retracting the handle, the force 22 disengages the projection 65 from the extended recess 80. The engagement between the first recess 80 and projection 65 is designed for a maximum load in excess of the capacity of the bag but of a convenient capacity such that the excess

Document A: New Invention (3/7)

force applied by the traveller is not excessive. Tests indicate that for a loaded suit case 5 having a mass of 30kg, an additional 5kg is both a sufficient and convenient force to be applied by a traveller. In practice, I would expect the capacity of the engagement to be in the range 35-40kg to avoid accidental disengagement.

In this state, the wheel mounting is between the extended and retracted positions, balancing the mass of the case 5 against the spring 75. At this point, as shown in Figure 4B, the engagement portion 40 has been pushed down to its lower limit corresponding to the retracted position of the handle. By applying a force to the suit case 5, the wheel mountings compress the spring 75 until the projection engages with the second recess 85. As shown in Figure 4C, the wheels are now fully retracted and held in place by the projection 65 received by the second recess 85.

To reverse the process the handle is lifted so as to disengage the projection from the second recess, and so releasing the fixed wheel mounting. The capacity of the projection 65 and second recess 85 is much lower than that of the first recess and should only require a force applied to the handle of about two or three kilograms. By lifting the handle the wheel mounting is extended by the spring 75 between the extended and retracted positions. By lifting the case 5, the now unloaded spring extends the wheel mounting so as to re-engage the projection 65 and the first recess 80. The case is now ready for use.

Halyna instructs you that there are no similar products on the market that can perform the same task and therefore she is hoping for very broad claims. She nevertheless instructs you to perform a prior art search just to be certain.

PAPER A: PREPARATION OF A PATENT SPECIFICATION
24 October 2017, Tuesday
1330 – 1730 hrs

Maximum Time: 4 Hours (includes reading time) Maximum Marks: 100

Document A: New Invention (4/7)

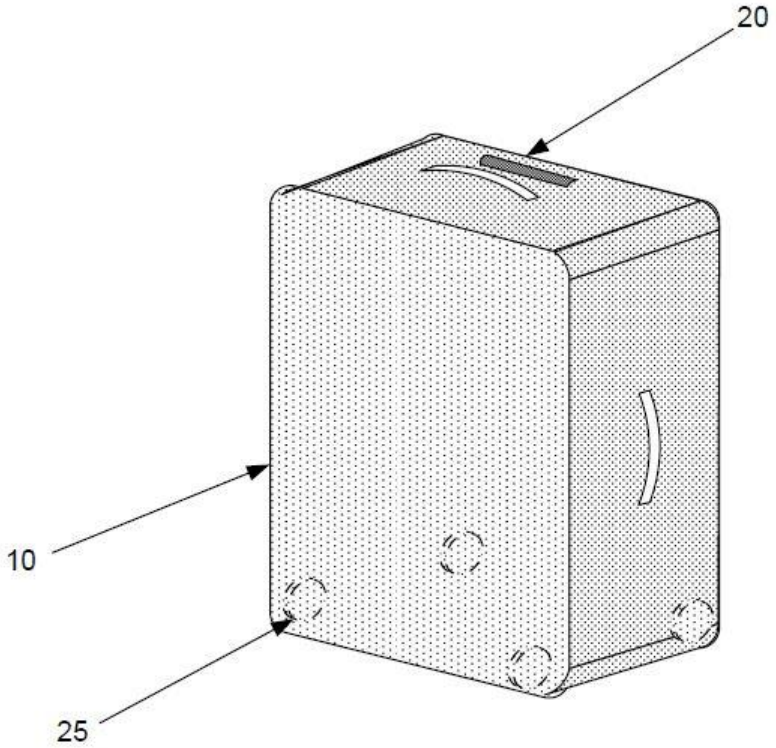

Figure 2

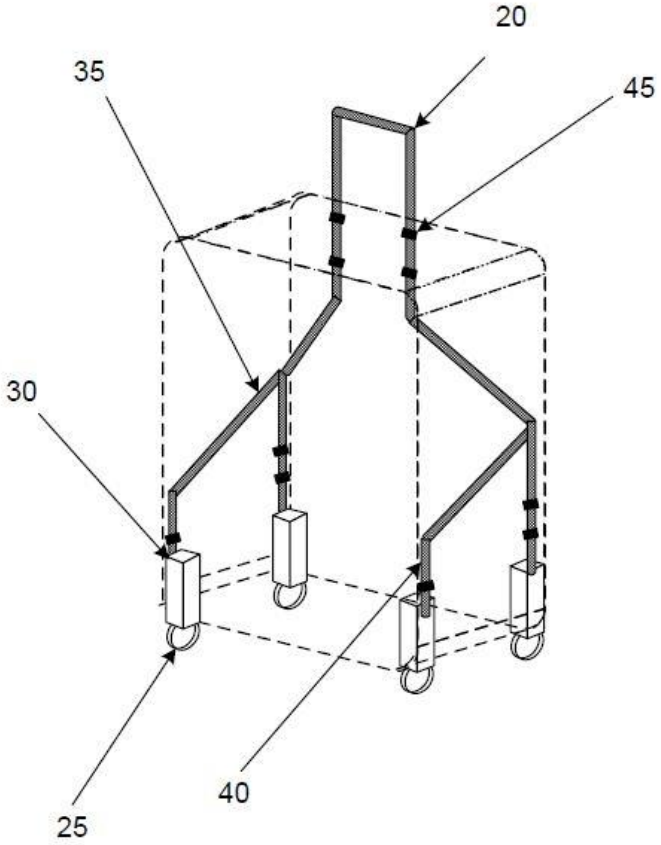

Figure 3A

Document A: New Invention (5/7)

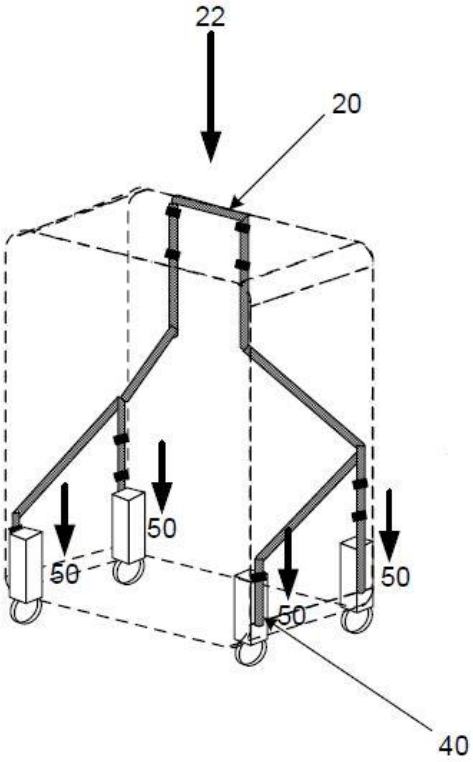

Figure 3B

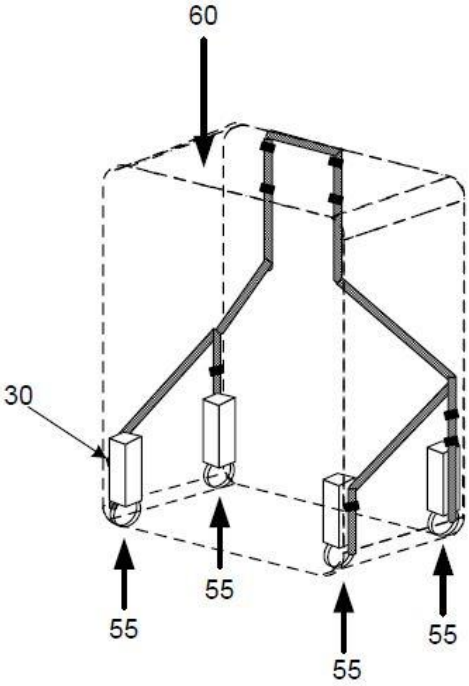

Figure 3C

PAPER A: PREPARATION OF A PATENT SPECIFICATION
24 October 2017, Tuesday
1330 – 1730 hrs

Maximum Time: 4 Hours (includes reading time) Maximum Marks: 100

Document A: New Invention (6/7)

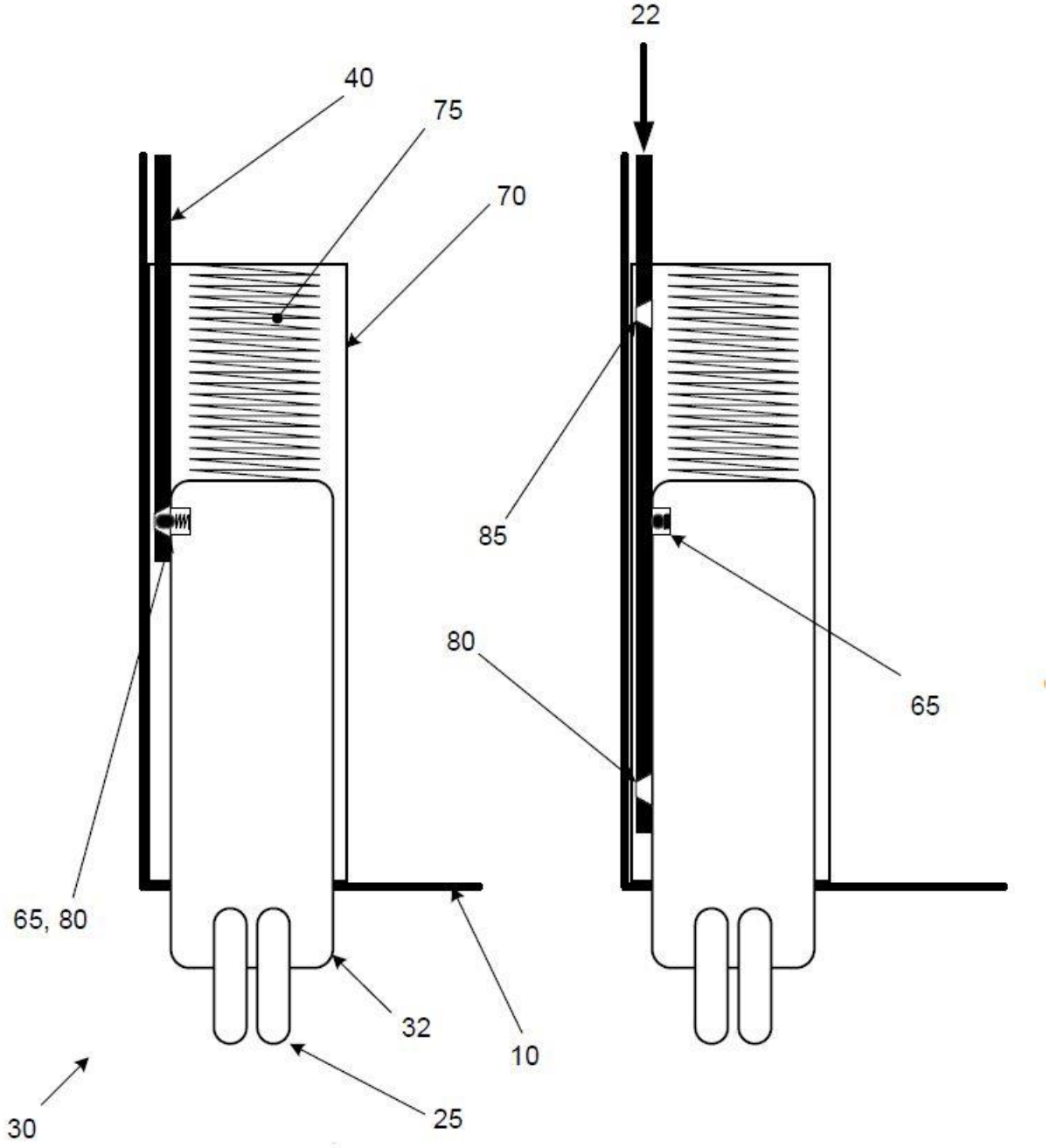

Figure 4A Figure 4B

PAPER A: PREPARATION OF A PATENT SPECIFICATION
24 October 2017, Tuesday
1330 – 1730 hrs

Maximum Time: 4 Hours (includes reading time) Maximum Marks: 100

Document A: New Invention (7/7)

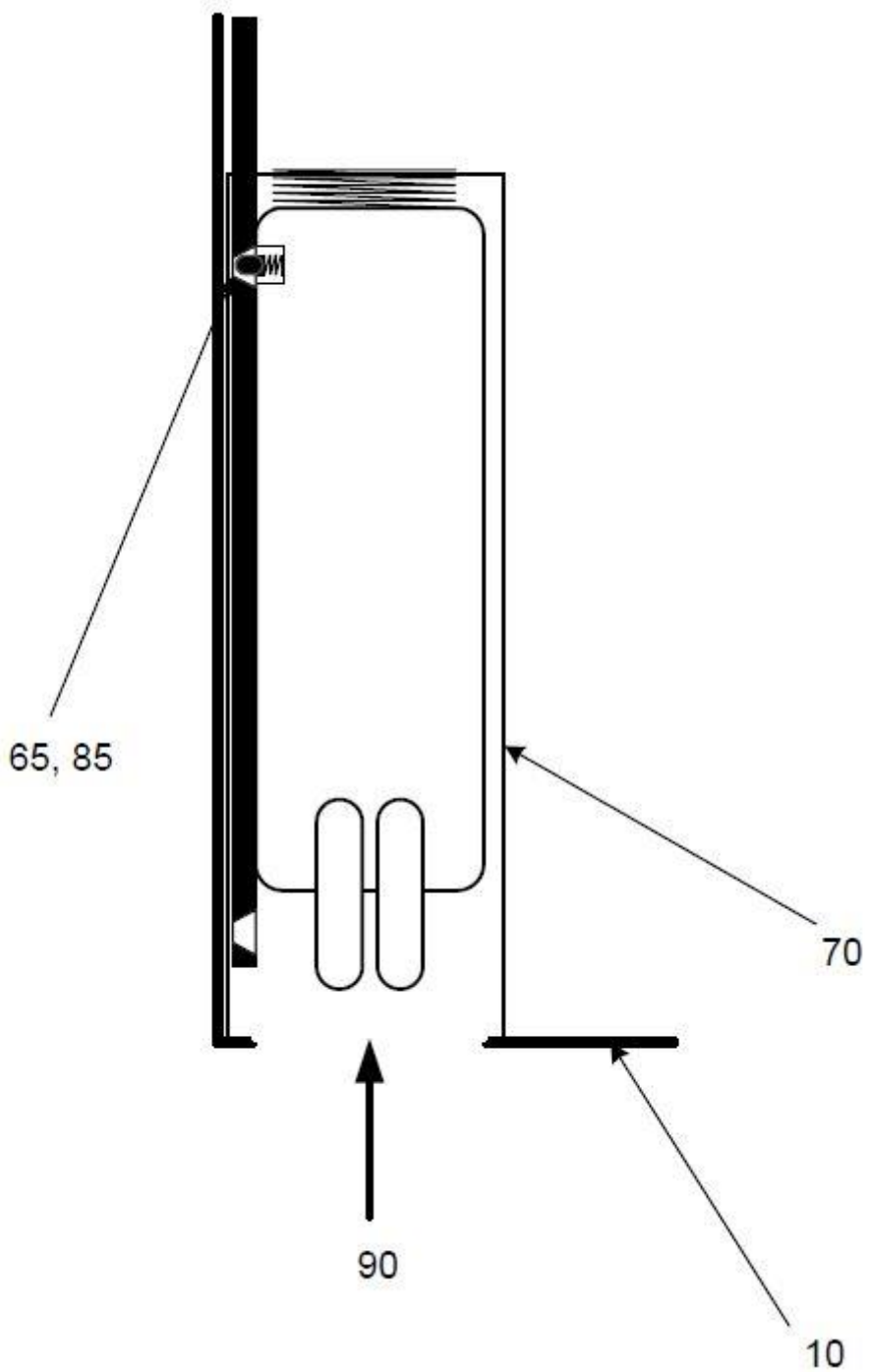

Figure 4C

THIS IS A BLANK PAGE

PAPER A: PREPARATION OF A PATENT SPECIFICATION
24 October 2017, Tuesday
1330 – 1730 hrs

Maximum Time: 4 Hours (includes reading time) Maximum Marks: 100

Document B: Prior Art #1 (1/1)

Description of Prior Art #1

As shown in Figure 1, this is a conventional suit case 5 of the more recent type having four wheels 15 projecting from an underside of the body 10 of the case 5 and a handle 20 which is selectively extendable and retractable. In the extended position, as shown in Figure 1, the case 5 may be pulled along either on four wheels or tilted on 2 wheels. In the retracted position, the handle is fully, or at least partially, retracted into the body 10.

Figure 1
(Prior Art)

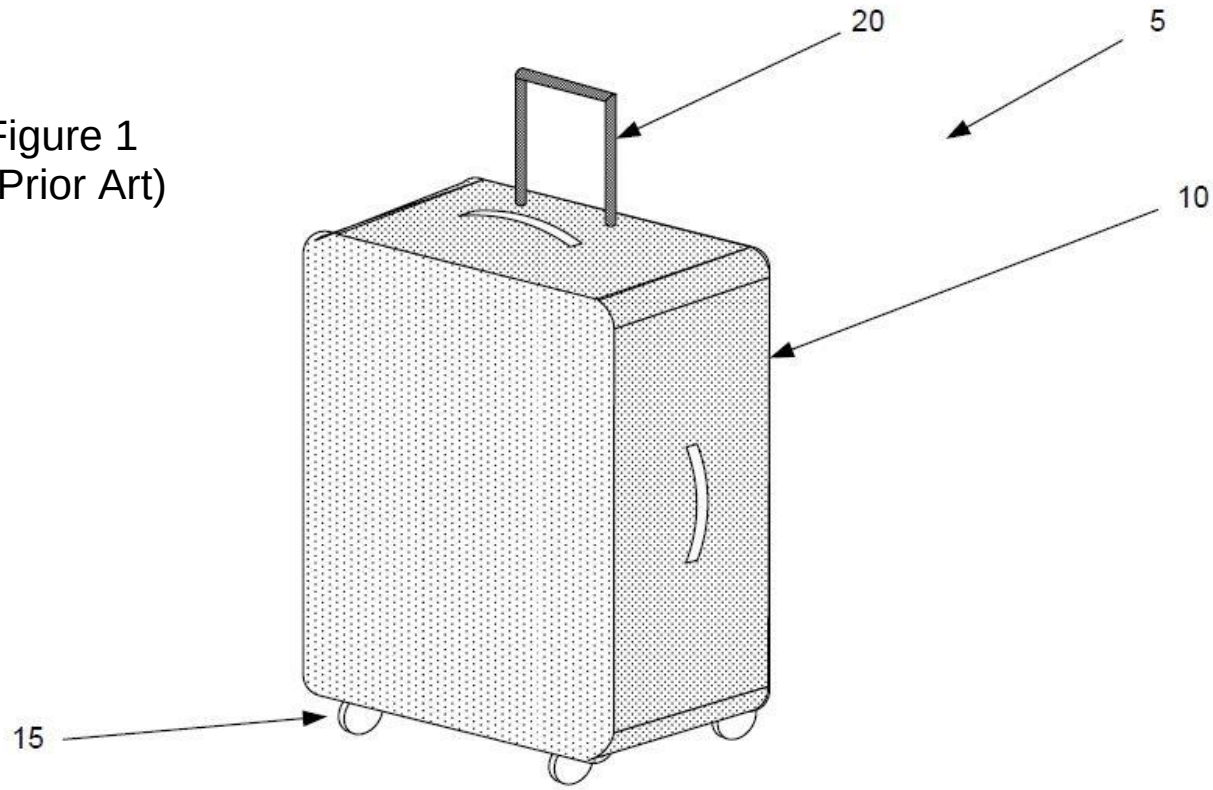

THIS IS A BLANK PAGE

PAPER A: PREPARATION OF A PATENT SPECIFICATION
24 October 2017, Tuesday
1330 – 1730 hrs

Maximum Time: 4 Hours (includes reading time) Maximum Marks: 100

Document C: Prior Art #2 (1/3)

Description of Prior Art #2

The prior art search yields US 5,407,039. There are several embodiments within this patent but you are drawn to the one shown in Figures 5A to 5C.

Here is a luggage trolley arrangement 95 whereby a suitcase 105 includes a rotatable handle 110. The suit case 105 includes a first and second pair of wheels 115, 120. The purpose of the luggage trolley 95 is to allow additional bags to be placed upon the top surface 100 of the suitcase 105 and so increase the carrying capacity of the traveller. You note that both the first pair of wheels 120 and second pair of wheels 115 are retractable. Of concern is the retractability of wheels 115, one of which is shown in Figures 5B and 5C.

The luggage trolley 95 includes a wheel well 135, into which the wheel 115 is capable of retracting. The wheel 115 is held by a bracket 140, to which is mounted a projection 130. The wheel well 135 includes a cavity 170 for receiving the projection 130.

The projection 130 includes a first and second aperture 180, 205 which correspond to an extended and retracted position. The wheel well 135 includes a pin 125 which is spring loaded 155 to insert a shaft 190 into either the extended aperture 180 or retracted aperture 205.

By pulling 210 the pin 125 against the spring 155, the shaft 190 is disengaged from the extended aperture 180. The projection 130 can then be manually pushed into the wheel well 135, until the pin 125 re-engages with the retracted aperture 205. This then fully retracts the wheel into the suitcase. The process is repeated for the second of the pair of wheels 115.

Document C: Prior Art #2 (2/3)

Figure 5A
(Prior Art)

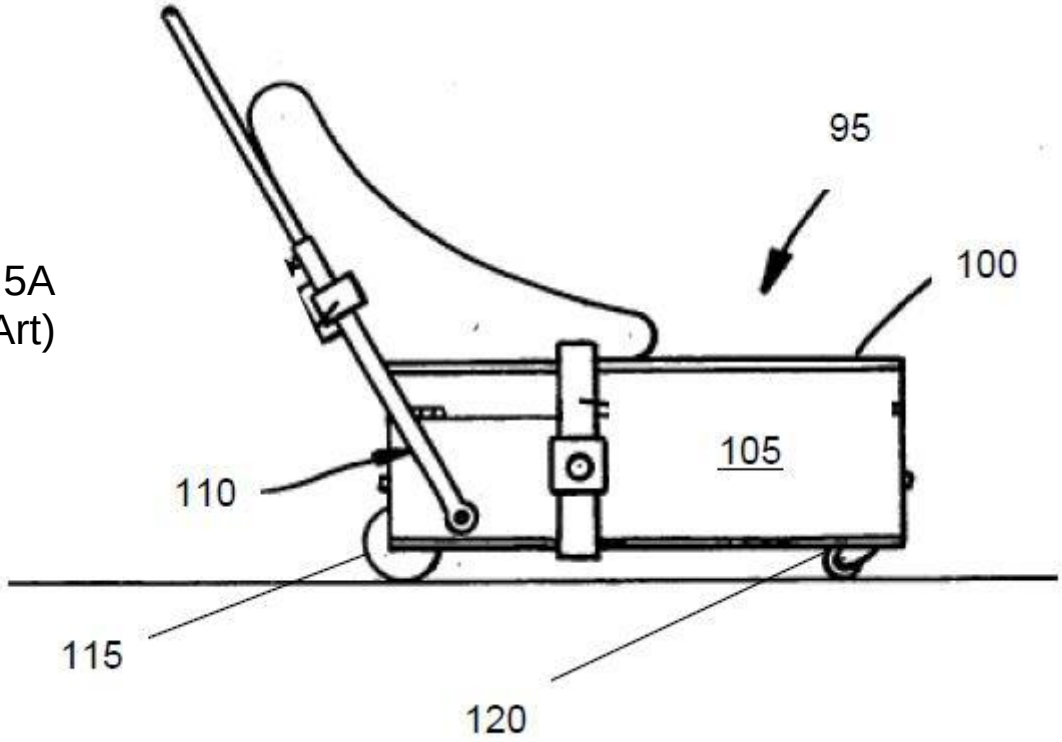

Figure 5B
(Prior Art)

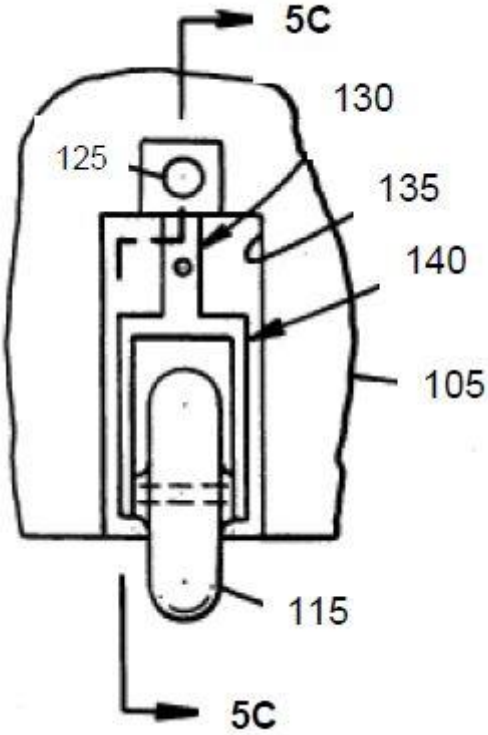

PAPER A: PREPARATION OF A PATENT SPECIFICATION
24 October 2017, Tuesday
1330 – 1730 hrs

Maximum Time: 4 Hours (includes reading time) Maximum Marks: 100

Document C: Prior Art #2 (3/3)

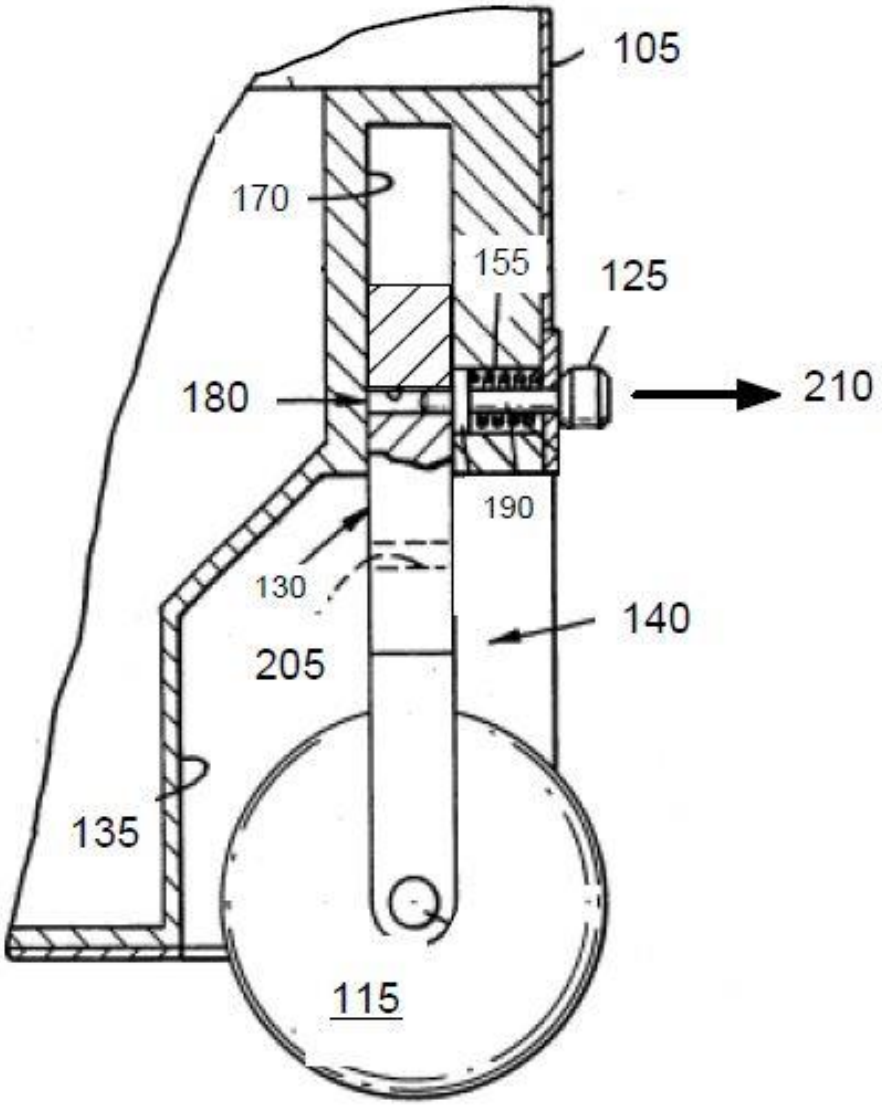

Figure 5C
(Prior Art)

END